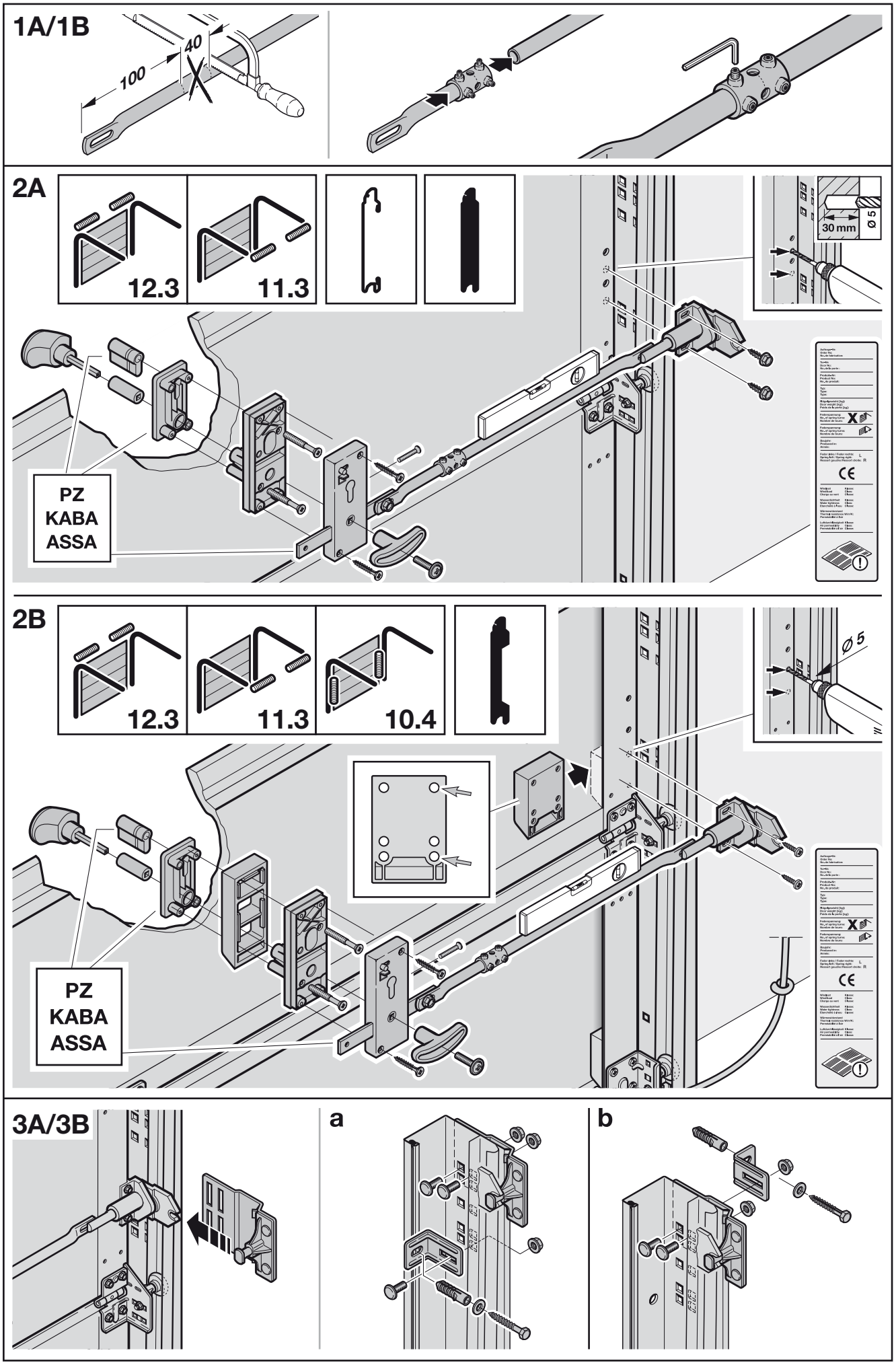
1A/1B
100
40
2A
12.3
11.3
30 mm
Ø 5
PZ
KABA
ASSA
2B
12.3
11.3
10.4
Ø 5
PZ
KABA
ASSA
3A/3B
a
b

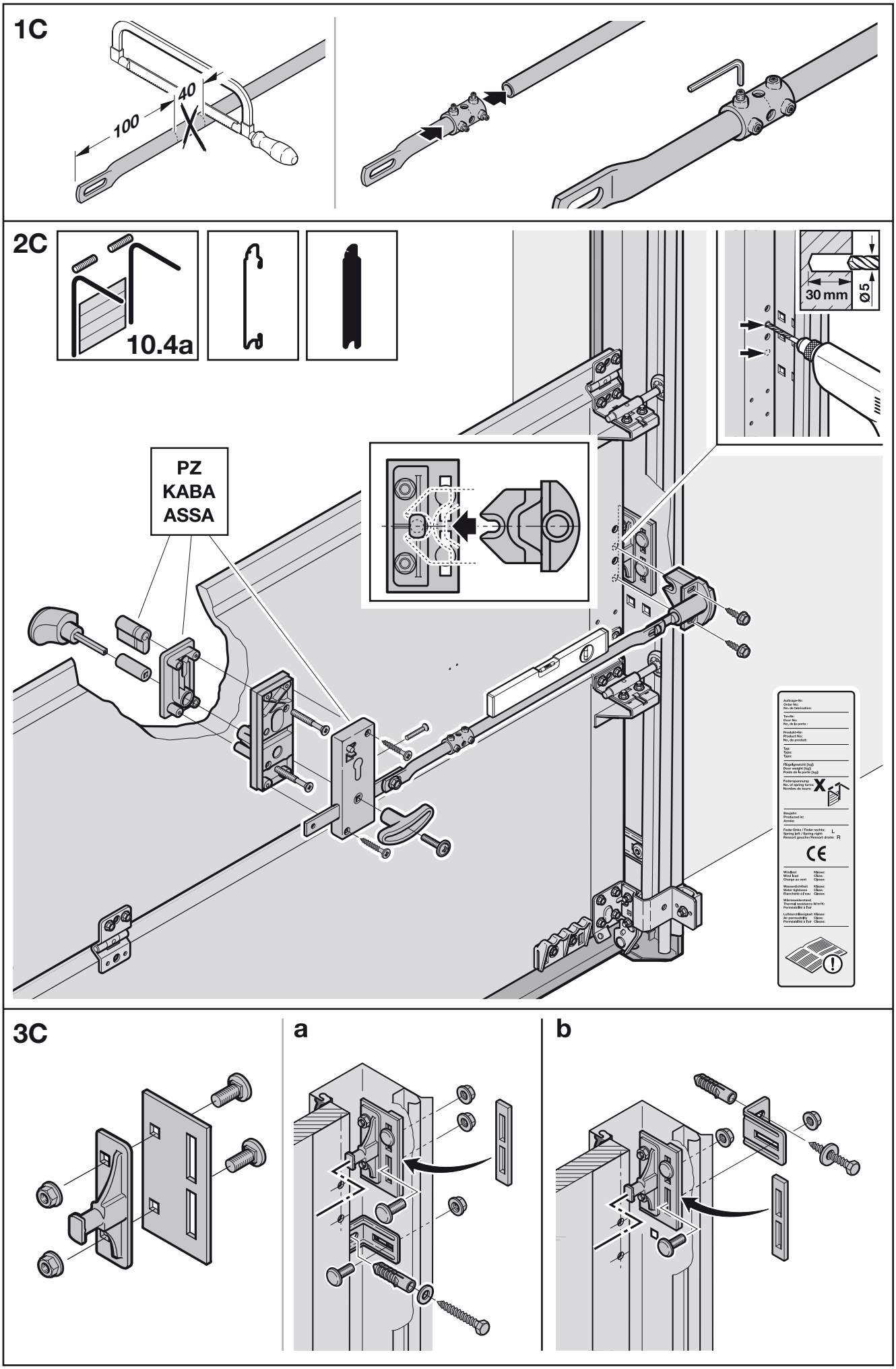
1C
40
100
2C
10.4a
30 mm
Ø5
PZ
KABA
ASSA
3C
a
b